SPRING CENTRALIZED , LEVER OPERATED

ZX3 3438 02

Type	: 5/3 Fully sealed Mid-position
Port Size	: G 1/4
Operating Pressure	: 0-10 bar
Operating Temperature	: +5°C to +70°C

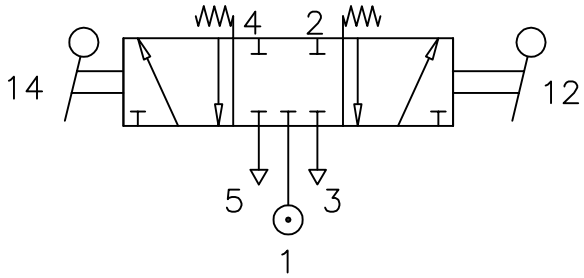

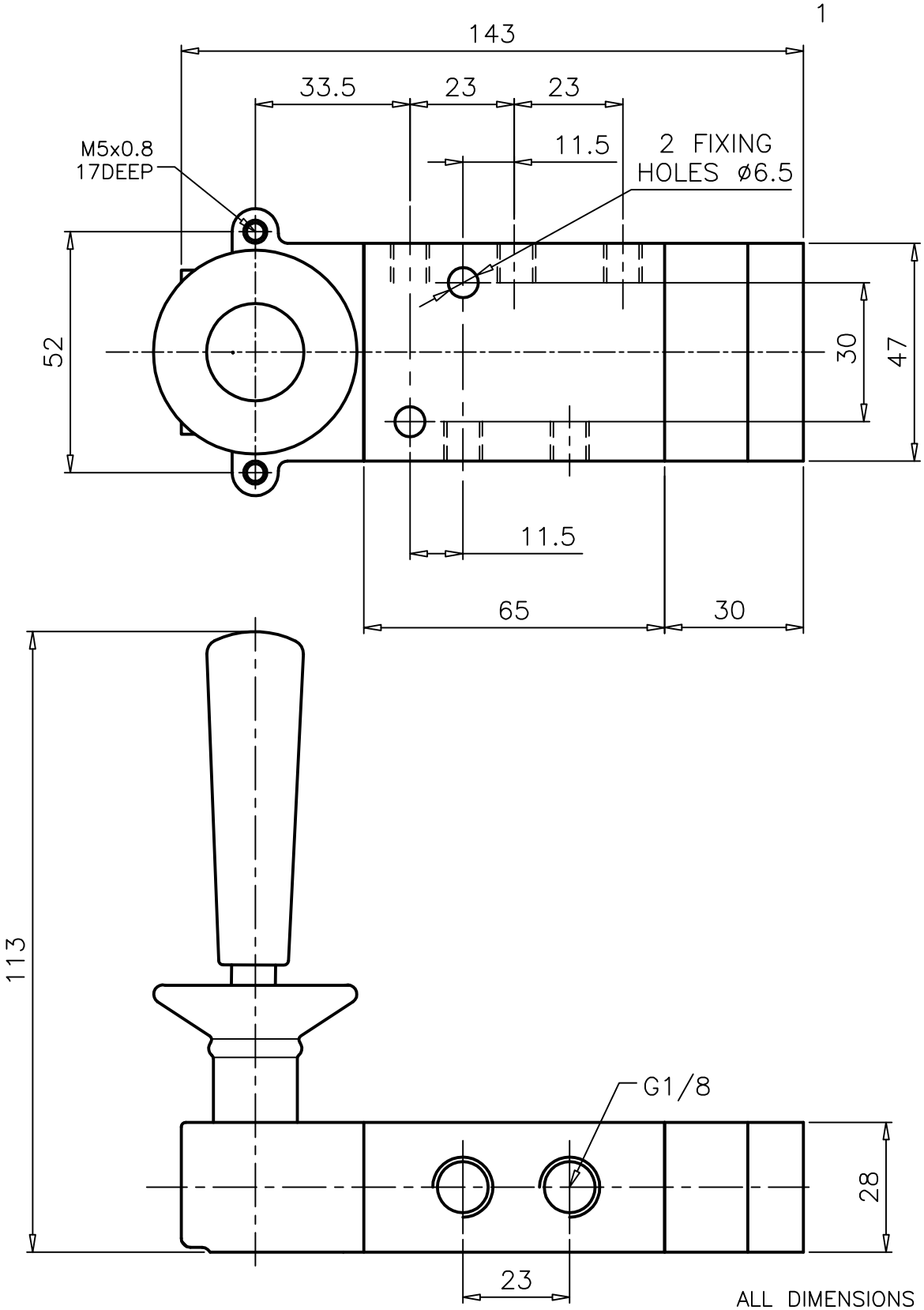

ALL DIMENSIONS ARE IN mm

NUCON ZANDER PRIVATE LIMITED
88 , C.I.E , BALANAGAR ,
HYDERABAD – 500 037

DRAWN	SREENIVAS.M	11.05.2005
CHECKED		
APPROVED		